LEGEND
PLUMBING • INDUSTRIAL • COMMERCIAL • HYDRONICS

www.legendhydronics.com
1-866-752-2055

SUBMITTAL SHEET

JOB NAME _____ ITEM TAG _____

JOB LOCATION _____ PART NUMBER _____

CONTRACTOR _____ DATE _____

ENGINEER APPROVAL _____ DATE _____

HIGH PERFORMANCE AIR & DEBRIS ELIMINATOR

T-88

Union connections with multiple connection type options*
Automatic, serviceable air vent with check valve
1/4 turn drain valve with GHT and tethered cap
Serviceable stainless steel screen
Available in 3/4" to 1-1/2" sizes.

- *Requires adapter to connect to the system piping.
- Manufactured in an ISO accredited facility

Pictured
T-88
w/ Various Tail Pieces

Specifications:

Max. Working Pressure, Non-Shock	125 p.s.i.
Max. Working Temperture	230° F

MATERIAL SPECIFICATION

	PART	MATERIAL	SPECIFICATION
1	Body	Forged brass	ASTM B124 UNS C37700
2	End adapter	Forged brass	ASTM B124 UNS C37700
3	O-ring	EPDM	Commercial grade
4	Internal strainer	Stainless steel	AISI 304
5	Check valve	Forged brass (body)	ASTM B124 UNS C37700
6	Air Vent	Forged brass (body)	ASTM B124 UNS C37700
7	Drain valve w/ GHT	Forged brass (body)	ASTM B124 UNS C37700
8	O-ring (2)	EPDM	Commercial grade
9	Body adapter (2)	Forged brass	ASTM B124 UNS C37700
10	Adapter gasket (2)	EPDM	Commercial grade
11	Union nut (2)	Forged brass	ASTM B124 UNS C37700

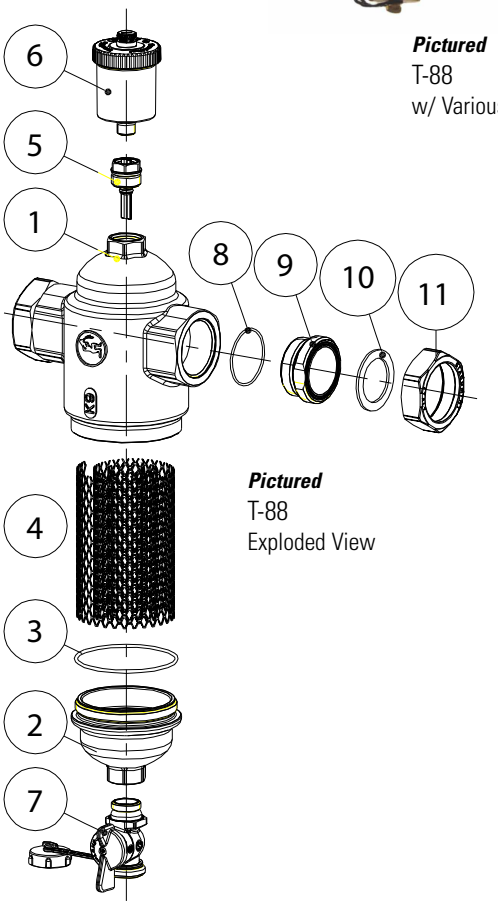

Pictured
T-88
Exploded View

LEGEND
PLUMBING • INDUSTRIAL • COMMERCIAL • HYDRONICS

www.legendhydronics.com
1-866-752-2055

SUBMITTAL SHEET

JOB NAME _____ ITEM TAG _____

JOB LOCATION _____ PART NUMBER _____

CONTRACTOR _____ DATE _____

ENGINEER APPROVAL _____ DATE _____

DIMENSIONS (Inches)

Size	A	B	C	D	E
3/4" FNPT	11.80	6.50	5.29	6.52	3.07
3/4" MNPT	11.80	7.20	5.29	6.52	3.07
3/4" SWT	11.80	6.38	5.29	6.52	3.07
3/4" PRESS	11.80	8.00	5.29	6.52	3.07
3/4" ISO COMP	11.80	8.38	5.29	6.52	3.07
3/4" ISO FNPT	11.80	8.25	5.29	6.52	3.07
1" FNPT	11.80	7.50	5.29	6.52	3.07
1" MNPT	11.92	7.38	5.60	6.32	3.46
1" SWT	11.80	7.38	5.29	6.52	3.07
1" PRESS	11.92	9.25	5.60	6.32	3.46
1" ISO COMP	11.92	9.81	5.60	6.32	3.46
1" ISO FNPT	11.92	9.50	5.60	6.32	3.46
1-1/4" FNPT	11.92	10.31	5.60	6.32	3.46
1-1/4" MNPT	11.92	9.13	5.60	6.32	3.46
1-1/4" SWT	11.92	9.13	5.60	6.32	3.46
1-1/4" ISO FNPT	11.92	10.31	5.60	6.32	3.46
1-1/2" MNPT	12.13	10.00	5.50	6.63	3.50
1-1/2" SWT	12.13	10.00	5.50	6.63	3.50

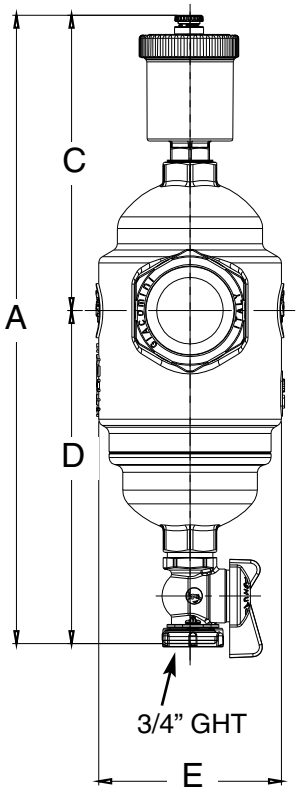

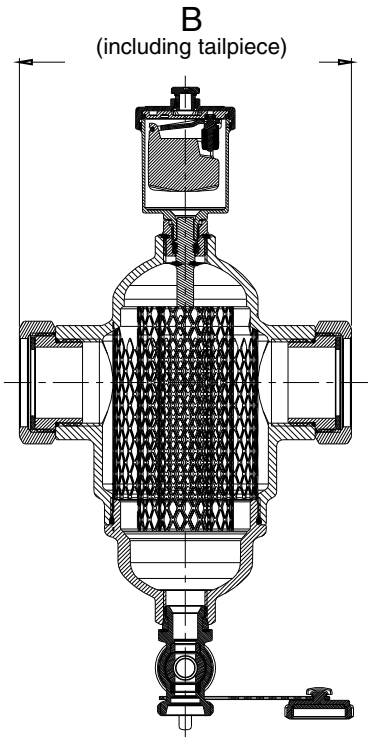

Pictured
T-88
Measurments/Cutaway

LEGEND
PLUMBING • INDUSTRIAL • COMMERCIAL • HYDRONICS
300 N. Opdyke Rd.
Auburn Hills, MI 48326
www.legendhydronics.com
1-866-752-2055

SUBMITTAL SHEET

JOB NAME	ITEM TAG
JOB LOCATION	PART NUMBER
CONTRACTOR	DATE
ENGINEER APPROVAL	DATE

HYDRAULIC SEPARATOR

HS-808

Union connections.

Automatic, serviceable air vent with check valve.

1/4 turn drain valve with GHT and tethered cap.

A variety of Legend Connect™ tailpiece styles are available (sold separately).

1/2" port for temperature / pressure gauge.

Insulation shell included.

Specifications:
Max Working Pressure, Non-Shock: 145 p.s.i.
Max Working Temperature: 230° F without insulation
205° F with insulation

Insulation Shell:

- Expanded, closed cell polyurethane.
- Embossed, aluminum external coating.
- Shell thickness: 0.80 inches.
- Shell density: 2.5 lbs/ Ft ^{3}
- Coating thickness: 70 µm
- Thermal conductivity: 0.163 Btuh in. / Ft ^{2} °F.
- Maximum Temp: 205 °F
- Insulation ring thickness: 0.2 inches.

Pictured:
HS-808 w/ various LegendConnect™ tailpieces (sold separately)

MATERIAL SPECIFICATION

	PART	MATERIAL	SPECIFICATION
1	Body	Steel	FE360
2	Automatic Air Vent w/ Check	Forged Brass	ASTM B124 UNS C37700
3	Drain Valve w/ GHT	Forged Brass	ASTM B124 UNS C37700
4	Temp. / Pressure Port Plug	Forged Brass	ASTM B124 UNS C37700
5	Adhesive Insulation Ring Lg (x4)	Expanded Polyethylene	
6	Adhesive Insulation Ring Sm (x3)	Expanded Polyethylene	-
7	Insulation Shell, front	Expanded Polyurethane w/ Aluminum Coating	-
8	Insulation Shell, back	Expanded Polyurethane w/ Aluminum Coating	-
9	Insulation Tape	Aluminum	-
10	O-Ring	EPDM	Commercial grade
11	MPT body adapter	Forged Brass	ASTM B124 UNS C37700
12	Adapter gasket	EPDM	Commercial grade
13	Union nut	Forged Brass	ASTM B124 UNS C37700

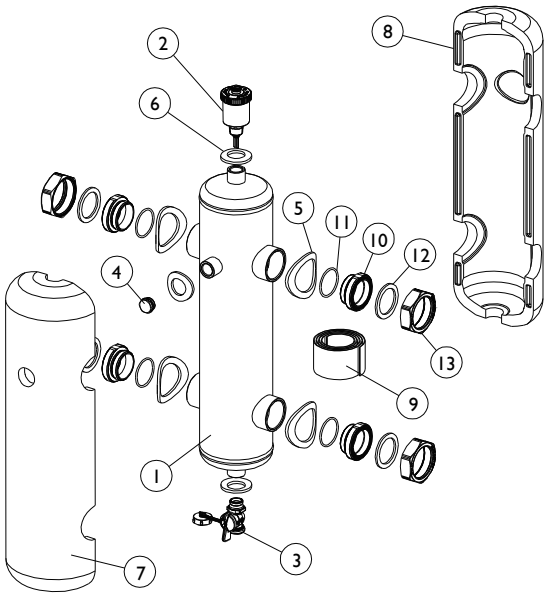

Pictured:
HS-808 Exploded View

SUBMITTAL SHEET (Page 2)

JOB NAME _____ ITEM TAG _____

JOB LOCATION _____ PART NUMBER _____

CONTRACTOR _____ DATE _____

ENGINEER APPROVAL _____ DATE _____

DIMENSIONS

Size	A	B	C	D1	D2	E	F	G	H
1" MNPT	21.53	8.13	8.66	3.00	4.60	7.30	5.57	4.02	2.52
1" SWT	21.53	8.13	8.66	3.00	4.60	7.30	5.57	4.02	2.52
1" FNPT	23.30	7.65	9.45	3.50	5.10	7.79	6.06	4.53	2.78
1" Press	23.30	9.41	9.45	3.50	5.10	7.79	6.06	4.53	2.78
1" ISO Comp	23.30	9.96	9.45	3.50	5.10	7.79	6.06	4.53	2.78
1" ISO FNPT	23.30	9.65	9.45	3.50	5.10	7.79	6.06	4.53	2.78
1-1/4" MNPT	23.30	9.28	9.45	3.50	5.10	7.79	6.06	4.53	2.78
1-1/4" FNPT	23.30	10.46	9.45	3.50	5.10	7.79	6.06	4.53	2.78
1-1/4" SWT	23.30	9.28	9.45	3.50	5.10	7.79	6.06	4.53	2.78
1-1/4" ISO FNPT	23.30	10.46	9.45	3.50	5.10	7.79	6.06	4.53	2.78
1-1/2" MNPT	25.27	11.22	10.24	4.50	6.10	8.38	6.65	5.52	3.27
1-1/2" SWT	25.27	11.22	10.24	4.50	6.10	8.38	6.65	5.52	3.27

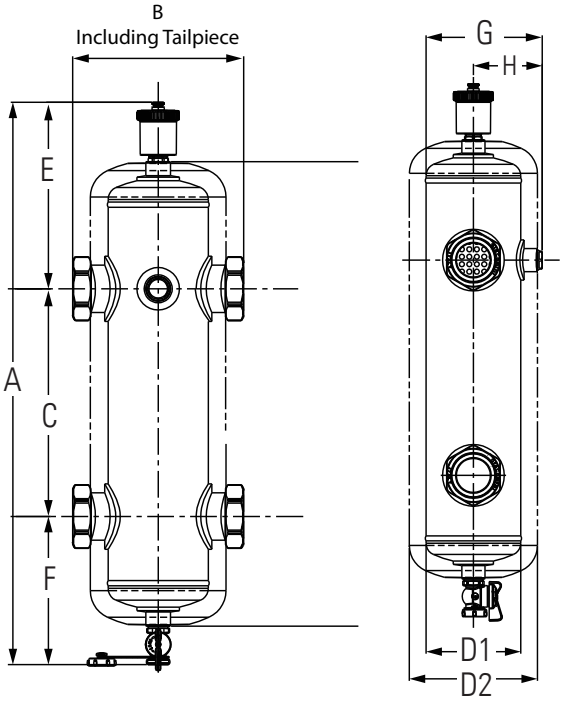

HS-808 SIZE SELECTION

To select the proper size HS-808 for the project; determine the maximum flow rate for both the primary (f1) and secondary (f2) circuits, considering each of the possible flow conditions for the system as shown in the diagrams below. Select the HS-808 connection size from the Sizing Chart below that can handle the highest of (f1) and (f2).

SIZING CHART

Connection Size	Maximum Flow Rate	Cv
1"	11 gpm	*
1-1/4"	18 gpm	*
1-1/2"	25 gpm	*

*The pressure drop thru the HS-808 is so low, the Cv is not measurable.

Pictured:
HS-808
Flow Diagrams

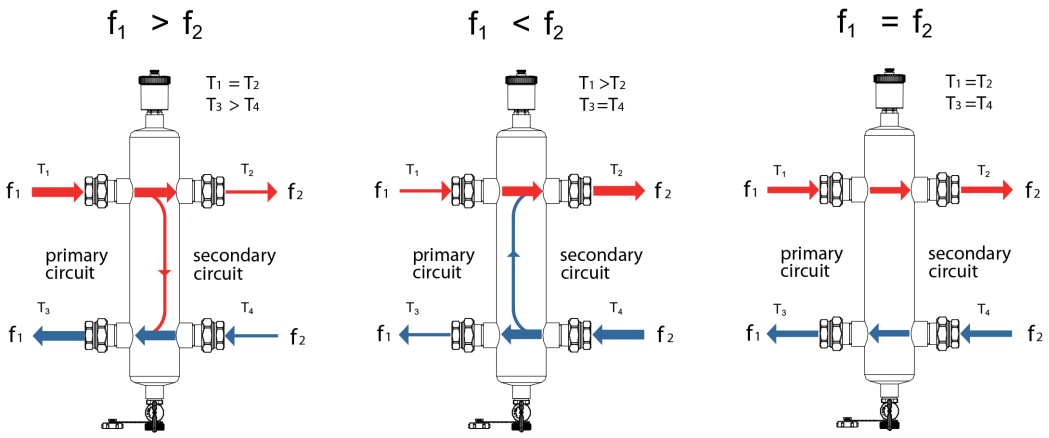

LEGEND
PLUMBING • INDUSTRIAL • COMMERCIAL • HYDRONICS
300 N. Opdyke Rd.
Auburn Hills, MI 48326
www.legendhydronics.com
1-866-752-2055

SUBMITTAL SHEET

JOB NAME	ITEM TAG
JOB LOCATION	PART NUMBER
CONTRACTOR	DATE
ENGINEER APPROVAL	DATE

Pictured:
LMV-3

3-WAY MIXING VALVE

LMV-3

Durable forged brass body.

Can be used in hydronic heating and cooling systems.

Allows for the precise control of the delivered water temperature in a hydronic system.

Utilizes the "LegendConnect" system for a variety of connection sizes & types (sold separately).

Install the by-pass reducing ring for the low temp condensing boiler or cooling applications.

Multiple electronic actuator options are available (sold separately).

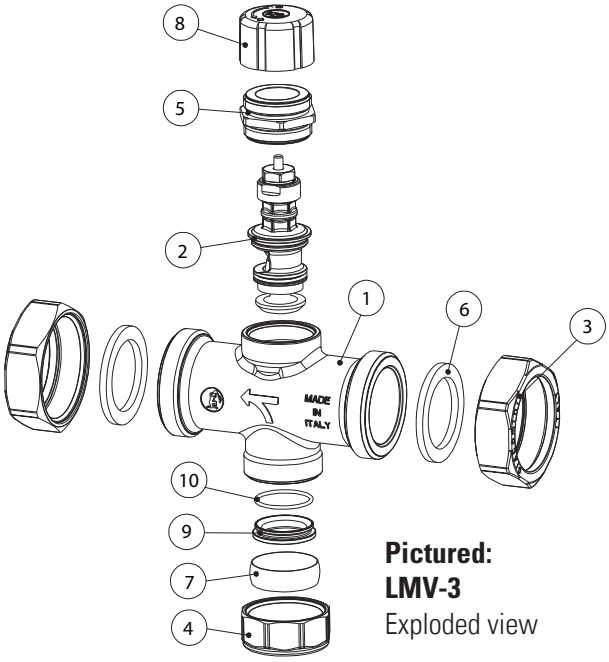

Pictured:
LMV-3
Exploded view

Working Pressures

Max Working Pressure, Non-shock (PSI):	125 p.s.i.
Max Working Temperature:	230°F
Max Flow:	88gpm
CV:	4.39

Connections:

Main Run - Via LegendConnect Fittings (sold separately).
1" - FNPT, Press, ISO Compression, ISO FNPT
1-1/4" - MNPT, FNPT, Sweat, ISO FNPT
By-pass - 1" Copper compression

MATERIAL SPECIFICATION

	PART	MATERIAL	QTY
1	Valve Body	Forged brass	UNS Alloy CW617N
2	Mixing assembly	Various materials	-
3	Tail piece nut (2)	Forged brass	UNS Alloy CW617N
4	1" Compression nut	Forged brass	UNS Alloy C37700
5	Bonnet nut	Forged brass	UNS Alloy CW617N
6	Gasket (2)	EPDM	Commercial grade
7	1" Compression ring	Tubular brass	UNS Alloy C37700
8	Manual handle	High temperature polymer	Commercial grade
9	Reducing ring	Forged brass	UNS Alloy C37700
10	O-ring	EPDM	Commercial grade

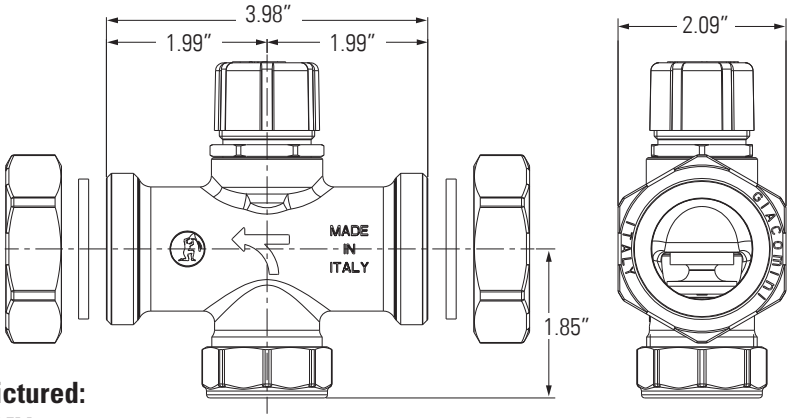

Pictured:
LMV-3
Front & Side view